250 SERIES CURTAIN WALL

LIGHT SHELF

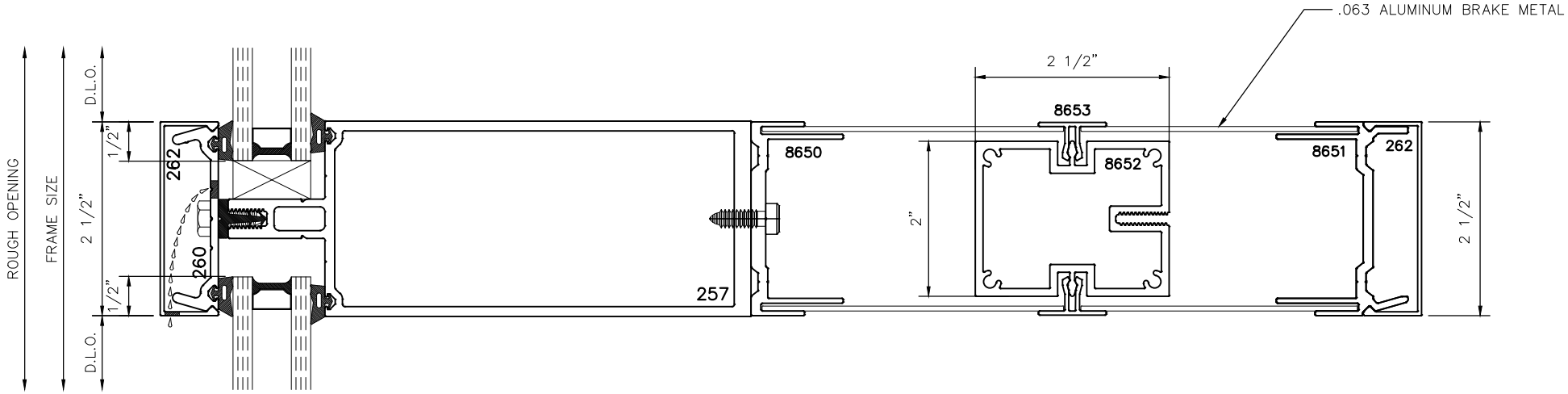

1 HORIZONTAL SECTION